GENERALIZED PARTON DISTRIBUTIONS AT NEXT-TO-LEADING ORDER*

Martin McDermott

Division of Theoretical Physics, Department of Mathematical Sciences
University of Liverpool, L69 3BX, UK

and Andreas Freund

Institut fuer Theoretische Physik, University of Regensburg
93053 Regensburg, Germany

(Received May 17, 2002)

This talk discusses Generalized Parton Distributions (GPDs), which encode various types of non-perturbative information relevant to the QCD description of exclusive processes. Results on their Next-to-Leading Order (NLO) QCD evolution are presented. We find that models for the input GPDs based on double distributions require some modification in order to reproduce the available data on deeply virtual Compton scattering.

PACS numbers: 11.10.Hi, 11.30.Ly, 12.38.Bx

Generalized parton distributions are required to calculate a wide variety of hard exclusive processes (*e.g.* diffractive electro-production of vector mesons, or dijet photoproduction). The easiest and cleanest way to access GPDs is via the electro-production of a real photon, *i.e.* Deeply Virtual Compton Scattering (DVCS) [1] (see figure 1, which also defines some kinematic variables). DVCS amplitudes have been proven to factorize [2], *i.e.* to involve convolutions of perturbatively calculable coefficient functions with GPDs. The ZEUS, H1, HERMES and CLAS experiments all have data available [3]. On the theoretical side the next-to-leading order leading-twist analysis of DVCS is now complete and a great deal has been understood about the role of higher twist corrections (see *e.g.* [4] and references therein). We have completed a NLO numerical analysis of GPDs, DVCS amplitudes and observables [5] and present some of our results here. Most of our analysis code is available from the HEPDATA web-site [6].

* Presented at the X International Workshop on Deep Inelastic Scattering (DIS2002) Cracow, Poland, 30 April–4 May, 2002.

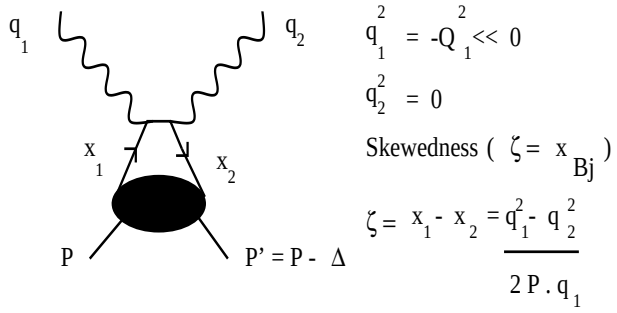


Fig. 1. DVCS amplitude and skewed kinematics.

GPDs are defined by Fourier transforms of twist two operators sandwiched between unequal momentum nucleon states. They encode a variety of non-perturbative information about the nucleon, including conventional Parton Distribution Functions (PDFs), distributions amplitudes and form factors, and reproduce these in various limits. The essential feature of the two parton correlation function shown in figure 2 is the presence of a finite momentum transfer, $\Delta = P - P'$, in the t-channel. Hence the partonic structure of the hadron is tested at *distinct* momentum fractions, x_1, x_2. On the light cone these matrix elements are parameterized by Double Distributions (DDs) which depend on two plus-momentum fractions with respect to two external momenta, on the four momentum transfer squared, $t = \Delta^2$, and on a four-momentum scale μ^2. The external momenta can be selected in several ways (*e.g.* either the "symmetric" $(\Delta, \bar{P} = (P + P')/2)$, or "natural" (Δ, P) choices). Unfortunately this freedom has led to a proliferation of definitions and nomenclature in the literature (skewed, off-diagonal, non-diagonal, off-forward, ...) to describe essentially the same objects, which has led to considerable confusion. Hence the collective name *generalized* has been introduced to attempt to clarify the situation.

Radyushkin [7] introduced symmetric DDs, with plus momentum fractions, x, y of the outgoing and returning partons defined as shown in the left hand plot of figure 2. They exist on the diamond-shaped domain shown

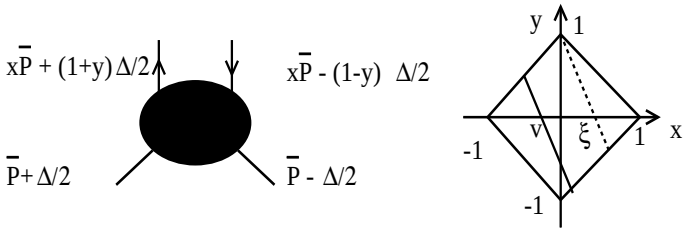


Fig. 2. Symmetric double distributions and their physical domain.

to the right. For a given skewedness, $\xi = \zeta/(2-\zeta)$, the outgoing parton lines, of course, only have a single plus momentum, so that Ji's distributions $H(v,\xi)$ [8] are related to these DDs, via an integral involving $\delta(v-x-\xi y)$, along the off-vertical lines in the diamond ($v \in [-1,1]$, and the dotted line corresponds to $v = \xi$). For our numerical solution of the renormalization group equations we prefer to work with the *natural* off-diagonal PDFs defined by Golec-Biernat and Martin [9], which have a momentum fraction $X \in [0,1]$ of the incoming proton's momentum. Their relationship to Ji's functions is shown in figure 3. There are two distinct regions: the DGLAP region, $X > \zeta$, in which the GPDs obey a generalized form of the DGLAP equations for PDFs, and the ERBL region, $X < \zeta$, where the GPDs obey a generalized form of the ERBL equations for distributions amplitudes. In the ERBL region, due to the fermion symmetry, $\mathcal{F}_q$ and $\mathcal{F}_{\bar{q}}$ are not independent and this leads to an anti-symmetry of the unpolarized quark distributions about the point $\zeta/2$ (the gluon GPD is symmetric). Another formal property of the GPDs, which can be proved on general grounds, is that the N-moments of H are polynomials of degree ξ^N: this is known as polynomiality. In addition, any input model for GPDs must reproduce the conventional PDFs for very small skewedness: $\lim_{\zeta\to 0} \mathcal{F}_i(X,\zeta) \to f_i(X)$ the "forward limit".

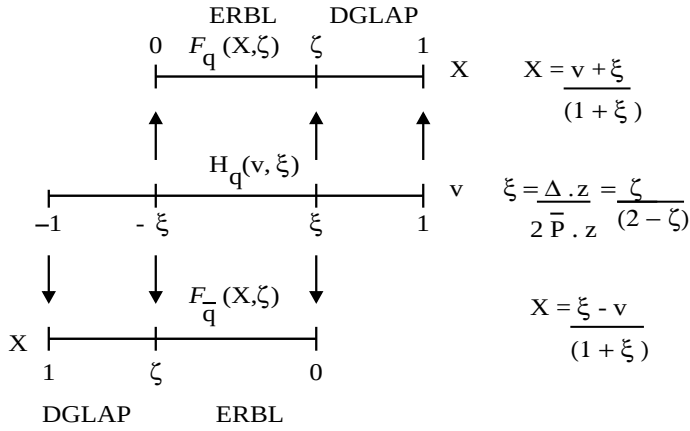


Fig. 3. Relation between $\mathcal{F}$ and H.

As a model for the GPDs, with the correct features, we use Radyushkin's factorized ansatz [7] for the double distributions

$$F^{\mathrm{DD}}(x,y) = \pi(x,y) f^i(x) A^i(t)\,, \tag{1}$$

where $A^i(t)$ is a form factor form for the factorized t-dependence, $f^i(x)$ is the forward PDF and

$$\pi(x,y) = \frac{\Gamma(2b+1)}{2^{2b+1}\Gamma^2(b+1)} \frac{\left[(1-|x|)^2 - y^2\right]^b}{(1-|x|)^{2b+1}} \tag{2}$$

is the profile function which introduces the dependence on skewedness (normalized such that $\int_{-1+|x|}^{1-|x|} dy\, \pi(x,y) = 1$). In the canonical model $b_q = 1$ and $b_g = 2$, $b = \infty$ corresponds to the forward case. By design this model automatically respects the forward limit. To respect polynomiality an additional term, the so-called D-term, is required in the ERBL region, for which we use the model of [10]. Numerical studies indicate that this term is significant only at large ζ (its influence drops below 1% in for $\zeta < 0.01$).

In the DGLAP region integration over y of the DD leads to the follow type of integral

$$\mathcal{F}_{q,a}(X,\zeta) = \frac{2}{\zeta} \int\limits_{\frac{X-\zeta}{1-\zeta}}^{X} dx' \pi^q \left(x', \frac{v-x'}{\xi} \right) q^a(x') \,. \tag{3}$$

This leads to a serious problem in this model: when $X \to \zeta$ the PDF is sampled down to zero, where it has not yet been measured. For non-singular distributions this presents no particular problems (although it does involve an extrapolation to $x' = 0$), however, for singular distributions the precise extrapolation is crucial and in general leads to a large enhancement of the GPD relative to the PDF in this region (for CTEQ6M the factor can be as large as five). When we compared this model to the H1 DVCS data it overshoots by a factor of approximately 4–6 because of this ! To tame this rather unnatural enhancement we introduce a modification of such integrals, via a lower cutoff of the form $a\,\zeta$. This may be justified by examining the effect of imposing exact kinematics on the imaginary part of the DVCS amplitude which would be required to produce finite mass hadrons in the final state. Such reasoning indicates that $a \sim m^2_{\text{hadron}}/Q_0^2 \approx 1/2$ is a reasonable value. Introducing such a cutoff reduces the enhancement factor of the input GPD close to $X = \zeta$ considerably and allows the H1 data to be well described at both LO and NLO. Unfortunately, it leads to a mild violation of the polynomiality condition since it may introduce higher moments, or slightly alter the highest allowed moments.

Both the continuity of the GPD through the boundary point $X = \zeta$ and the symmetries about the point $X = \zeta/2$ are preserved under evolution. The evolution equations, at NLO accuracy, are solved numerically on a grid for each value of ζ. For example figure 4 shows the quark GPD at $\zeta = 0.1$ at the input scale and evolved to $Q = 5\,\text{GeV}$ for CTEQ6M (C6M) and MRST01 (M01) [11] input PDFs. This figure demonstrates that the anti-symmetry about $\zeta/2$ is preserved under evolution.

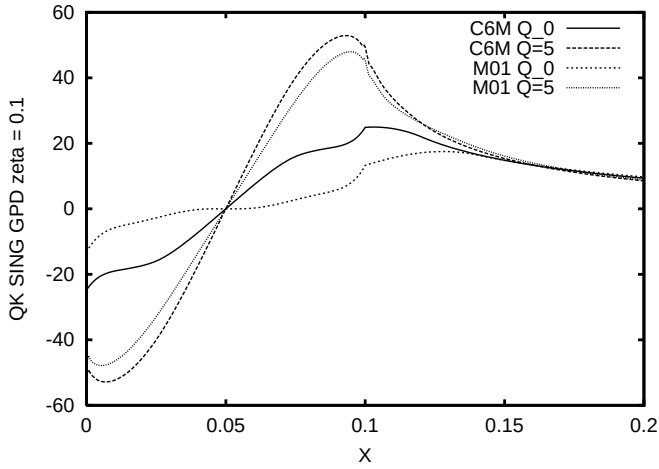


Fig. 4. Quark singlet GPD for $\zeta = 0.1$ at the input scale Q_0 and $Q = 5$.

The H1 data is already starting to constrain the allowed input GPDs. At present input models are based only on the formal mathematical properties of the GPDs (polynomiality, symmetries and the forward limit). As the data improves it will become necessary to fit the input distributions via minimization methods in a similar fashion to the inclusive case. Our analysis indicates that the cutoff parameter, a, and the profile function power, b, may be good candidates for fit parameters, since both of them control the level of skewedness imposed at the input scale.

REFERENCES

[1] A. Freund, M. McDermott, M. Strikman, *Acta Phys. Pol.* **B33**, (2002) next issue.

[2] J.C. Collins, A. Freund, *Phys. Rev.* **D59**, 074009 (1999).

[3] P.R. Saull, for ZEUS Collaboration, `hep-ex/0003030`; C. Adloff *et al.*, H1 Collaboration, *Phys. Lett.* **B517**, 47 (2001); A. Airapetian *et al.*, HERMES Collaboration, *Phys. Rev. Lett.* **87**, 182001 (2001); S. Stepanyan *et al.*, CLAS Collaboration, *Phys. Rev. Lett.* **87**, 182002 (2001).

[4] A.V. Belitsky, D. Mueller, L. Niedermeier, A. Schafer, *Phys. Lett.* **B474**, 163 (2000); *Nucl. Phys.* **B593**, 289 (2001); A.V. Belitsky, D. Mueller, A. Kirchner, *Nucl. Phys.* **B629**, 323 (2002).

[5] A. Freund, M. McDermott, *Phys. Rev.* **D65**, 056012 (2002); *Phys. Rev.* **D65**, 074008 (2002); *Phys. Rev.* **D65**, 091901(R) (2002); *Eur. Phys. J.* **C23**, 651 (2002).

[6] http://durpdg.dur.ac.uk/hepdata/dvcs.html

[7] A.V. Radyushkin, *Phys. Rev.* **D56**, 5524 (1997); *Phys. Lett.* **B380**, 417 (1996); **B385**, 333 (1996); **B449**, 81 (1999); I.V. Musatov, A.V. Radyushkin, *Phys. Rev.* **D61**, 074027 (2000).

[8] X. Ji, *J. Phys. G* **24**, 1181 (1998); *Phys. Rev.* **D55**, 7114 (1997).

[9] K. Golec-Biernat, A.D. Martin, *Phys. Rev.* **D59**, 014029 (1999).

[10] M.V. Polyakov, C. Weiss, *Phys. Rev.* **D60**, 114017 (1999).

[11] J. Pumplin *et al.*, hep-ph/0201195; A.D. Martin, *et al.*, *Eur. Phys. J.* **C23**, 73 (2002).