NOISE-FREE APERIODIC STOCHASTIC MULTIRESONANCE*

S. Matyjaśkiewicz[a,b,c], A. Krawiecki[a], J.A. Hołyst[a]

[a]Faculty of Physics, Warsaw University of Technology
Koszykowa 75, 00-662 Warsaw, Poland
[b]Institute of Physics, Humboldt University at Berlin
Invalidenstraße 110, 10115 Berlin, Germany
[c]Department of Applied Mathematics, Warsaw Agriculture University
Nowoursynowska 166, 02-787 Warsaw, Poland

(Received September 23, 2002)

Noise-free aperiodic stochastic multiresonance in a chaotic map — a classical kicked spin model with damping — close to the attractor merging crisis is investigated. The input aperiodic signal, in a form of Gaussian correlated noise, is superimposed on the control parameter (the strength of the magnetic field pulses), and the output signal reflects jumps between two symmetric parts of the attractor above the crisis point. As the internal chaotic dynamics is varied by increasing the mean value of the control parameter, multiple maxima of the input-output correlation function are observed. This is due to the fractal structure of the precritical attractors and their basins of attraction colliding at the crisis point. The numerical results are confirmed by analytic evaluation of the correlation function, based on simple models of the colliding fractal sets. The observed phenomenon bears much resemblance to noise-free stochastic multiresonance with periodic signal observed in the same model, but the multiple maxima of the correlation function are less distinct due to the long tails in the probability distribution of the aperiodic signal.

PACS numbers: 05.40.+j, 05.45.+b

1. Introduction

Stochastic resonance (SR) [1] is a phenomenon occurring in certain periodically modulated, often multistable, nonlinear stochastic systems. The essence of this phenomenon is that the response of a system to a weak periodic signal can be improved by the presence of noise of optimum intensity (see reviews [2,3]). A similar phenomenon, called noise-free SR, occurs in

* Presented at the XV Marian Smoluchowski Symposium on Statistical Physics, Zakopane, Poland, September 7–12, 2002.

chaotic periodically driven systems in the absence of external noise [4], when its role is played by the chaotic dynamics. The best response to the periodic signal can be defined as the maximization of the output signal-to-noise ratio (SNR) as a function of the noise intensity or the control parameter, respectively.

In real world most external signals are *not* periodic. In such a situation the SNR cannot be used as a measure of SR and the best synchronization of the system to the aperiodic signal can be defined as the maximization of the correlation function C between input and output signals. In fact, the correlation function can be used as a measure of SR also in the case of periodic input signal, instead of the SNR. For the former kind of phenomena the term aperiodic stochastic resonance (ASR) has been coined [5,6]. Because of its possible relevance in biology ASR was mostly studied in stochastic models of neurons, *e.g.*, in the FitzHugh–Nagumo model with noise [7] or in a population of noisy neurons acting in parallel and subject to the same aperiodic input signal [8]. Besides, noise-free ASR was also studied in Ref. [9]. Usually only one maximum of the SNR or the correlation function C is observed as the input noise intensity or the control parameter in a chaotic system is varied. However, recently it has been found that in certain systems many or even an infinite number of maxima of the SNR or C can appear [10–14]. This phenomenon is called stochastic multiresonance [10,11]. In particular, noise-free stochastic multiresonance with periodic signals, characterized by multiple maxima of the SNR was observed in [12–14].

In this paper we study noise-free SR in systems driven by aperiodic input signals. In particular, we show that in large class of systems noise-free aperiodic stochastic multiresonance (ASM) appears as a natural consequence of their dynamical properties.

The first studies on SR [15–16] and noise-free SR [4,17–19] were performed in dynamical systems with bistable potentials, but now SR is equally well investigated in dynamical and non-dynamical threshold-crossing (TC) systems. The TC systems are defined as systems with output signal in the form of pulses which appear if the input signal crosses a certain threshold [20–22]. When the input signal changes the height of the potential barrier in a symmetric manner, the dynamical systems with symmetric bistable potential can be also described as TC systems and the particle jumps over the barrier — as TC events. The aim of the present paper is to investigate noise-free ASM in chaotic maps which can be described as TC systems. For this purpose we study a model chaotic map, describing the dynamics of a damped classical magnetic moment (spin) driven by pulses of magnetic field in the presence of anisotropy [23]. In such a system, for a certain value of the amplitude of pulses the attractor merging crisis [24] occurs and jumps of the spin between two parts of the postcritical chaotic attractor correspond-

ing to two equivalent spin orientations along the anisotropy axis become possible [23,25]. When the amplitude of pulses is modulated by additional aperiodic signal the map can be described as a bistable dynamical TC system of the above-mentioned kind, and the spin jumps can be interpreted as TC events. SR with periodic signal and noise in such a model was studied in Ref. [26] and noise-free stochastic multiresonance in Ref. [12–14]. Here we are interested in the case without noise and with the aperiodic input signal. As in other systems with noise-free SR the role of noise is played by deterministic chaos. Instead of varying the noise intensity the system control parameter, *i.e.*, the mean value of the amplitude of pulses is changed. Taking advantage of numerical simulations we show that C (defined as the correlation function between the aperiodic signal and the spin jumps events) depends on the control parameter in a very complicated way and multiple strong maxima of C (noise-free ASM) are observed. In theoretical investigation, we show that this phenomenon is a direct consequence of the fractal structure of the precritical attractors and their basins of attraction colliding at the crisis point, and of the influence of the aperiodic input signal.

This paper is organized as follows. In Sec. 2 we describe the spin map. In Sec. 3 we present numerical results for noise-free ASM in the spin model. In Sec. 4 we propose general theoretical description of noise-free ASM in systems with attractor merging crises. In Sec. 5 we compare numerical and theoretical results. Finally, Sec. 6 provides summary and conclusions.

2. The system under study

We consider a classical magnetic moment $\boldsymbol{S}$, $|\boldsymbol{S}| = S$ (spin) in the uniaxial anisotropy field and external transverse magnetic field $\tilde{B}(t)$ parallel to the x-axis. The Hamiltonian has the form

$$H = -A\left(S_z\right)^2 - \tilde{B}\left(t\right) S_x\,, \tag{1}$$

where $A > 0$ is the anisotropy constant. This model is related to experimentally investigated magnetic systems if one considers properties of isolated spins of large magnetic molecules or the nanometric-size single domain ferromagnetic particles (superparamagnets) [27,28]. The motion of the spin is determined by the Landau–Lifschitz equation

$$\frac{d\boldsymbol{S}}{dt} = \boldsymbol{S} \times \boldsymbol{B}_{\text{eff}} - \frac{\lambda}{S}\boldsymbol{S} \times \left(\boldsymbol{S} \times \boldsymbol{B}_{\text{eff}}\right)\,, \tag{2}$$

where $\boldsymbol{B}_{\text{eff}} = -dH/d\boldsymbol{S}$ is the effective magnetic field and $\lambda > 0$ is the damping parameter. Introducing the spherical coordinate system we can

transform (2) to the form

$$\begin{aligned} \dot{\theta} &= \frac{1}{\sin\theta}\frac{\partial H}{\partial \phi} - \lambda \frac{\partial H}{\partial \theta}, \\ \dot{\phi}\sin\theta &= -\frac{\partial H}{\partial \theta} - \frac{\lambda}{\sin\theta}\frac{\partial H}{\partial \phi}. \end{aligned} \tag{3}$$

Taking the transverse field in the form of periodic δ-pulses with amplitude B and period $\tilde{\tau}$

$$\tilde{B}(t) = B\sum_{n=1}^{\infty}\delta\left(t - n\tilde{\tau}\right), \tag{4}$$

Eq. (3) can be integrated to yield a superposition of two two-dimensional maps [23]. In the time between pulses of the magnetic field the spin performs damped precession and approaches the anisotropy axis (map T_A). During the action of the magnetic field, the influence of anisotropy can be neglected and the spin performs precession around the x-axis, simultaneously tilting toward it (map T_B),

$$\boldsymbol{S}_{n+1} = T_B\left[T_A\left[\boldsymbol{S}_n\right]\right], \tag{5}$$

where $\boldsymbol{S}_n = \boldsymbol{S}\left(t = n\tilde{\tau}^{+}\right)$ is a spin vector just after the action of the n-th magnetic field pulse. The map T_A can be written as

$$T_A\begin{bmatrix} \phi \\ S_z \end{bmatrix} = \begin{bmatrix} \phi + \Delta\phi \\ WS_z \end{bmatrix}, \tag{6}$$

where ϕ is the angle between the x-axis and the projection of the spin on the x-y plane, $\Delta\phi = (1/\lambda)\ln\left[\left(1 + S/S_z\right)/\left(1 + S/\left(WS_z\right)\right)\right] - 2AS\tilde{\tau}$, and $W = \left[c^2 + \left(S_z/S\right)^2\left(1 - c^2\right)\right]^{-1/2}$, $c = \exp\left(-2\lambda AS\tilde{\tau}\right)$. The map T_B can be written as

$$T_B\begin{bmatrix} \Phi \\ S_x \end{bmatrix} = \begin{bmatrix} \Phi - B \\ S - 2S\left(S - S_x\right)D^2U \end{bmatrix}, \tag{7}$$

where Φ is the angle between the y-axis and the projection of the spin on the x-z plane.

Let us take B as the control parameter and consider the map (5) with parameters $S = 1$, $\tilde{\tau}_c = 2\pi$, $\lambda_c = 0.1054942$ and $A_c = 1$. For B slightly below $B_c = 1$ two symmetric chaotic precritical attractors corresponding to two spin orientations ($S_z > 0$ and $S_z < 0$) exist. For $B > B_c$ these two attractors merge as a result of the attractor merging crisis and a new post-critical attractor consisting of two symmetric parts is born [23,25] (Fig. 1).

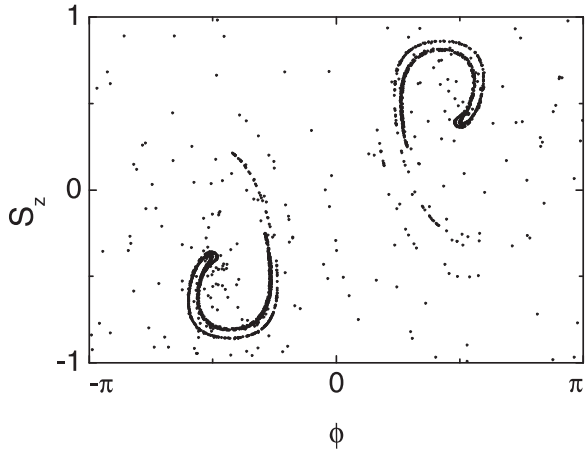

Fig. 1. The attractor of the spin map (5) after the attractor merging crisis for parameters $\tilde{\tau}_c = 2\pi$, $\lambda_c = 0.1054942$, $A_c = 1$ and $B = 1.001$.

The system switches chaotically between these two parts and the mean time between switches as a function of the control parameter obeys a typical power scaling law [24] $\langle\tau\rangle = C\,|B - B_c|^{-\hat{\gamma}}$, where $\hat{\gamma} > 0$ is a critical exponent. However, there are also considerable oscillations superimposed on this trend. They are connected with the fractal structure of precritical attractors and their basins of attraction colliding at the crisis point (Fig. 2). When the

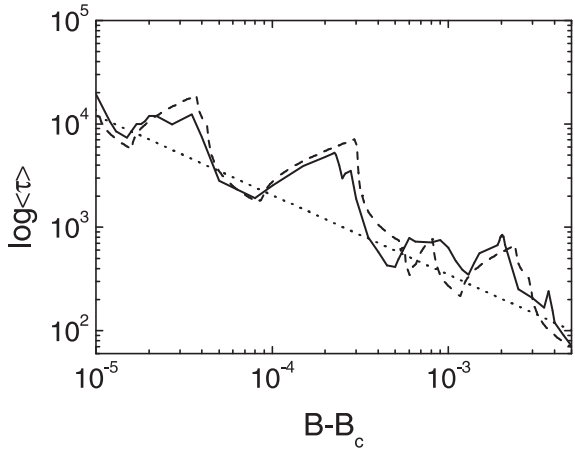

Fig. 2. The mean time between switches; solid line — numerical results, doted line — trend for $C = 0.695$, $\hat{\gamma} = 0.77$; dashed line — theoretical results for model parameters (Eq. (10)–(11)) $\alpha = 0.0108$, $\gamma = 0.294$, $\beta = 0.125$, $b_{\mathrm{E}} = 1.46793$, $a = 4.5009$, $b = 2.7$, $\zeta = 1.66$ and $K = L = 10$.

basins of attraction are fractal sets anomalous oscillations appear, including sections where $\langle\tau\rangle$ increases against the general trend [29]; such oscillations can be easily recognized in Fig. 2.

3. Numerical results

In order to observe the noise-free ASR we investigate Eq. (5) with the time-dependent control parameter (the amplitude of the magnetic field pulses)

$$B\,(n) = B_0 + D\xi(n), \tag{8}$$

where $D\xi(n)$ is the aperiodic signal in the form of correlated Gaussian noise with amplitude D, normalized density $\rho(\xi) = (2\pi)^{-1/2}\exp\left(-\xi^2/2\right)$ and the autocorrelation function $\langle\xi(n)\xi(m)\rangle = \exp(-|m-n|/\tau_0)$. With the input signal added to the control parameter the system given by Eqs. (4), (5), (8) can be described as a dynamical TC system and the spin jumps between the two parts of the postcritical attractor can be treated as TC events. Due to the symmetry of the system with respect to the plane $S_z = 0$ we can define the spin jump as crossing this plane by the phase trajectory, and to assume the output signal as $y_n = 1$ if at iteration n the jump occurred, *i.e.*, $S_{z,n-1}$ and if $S_{z,n}$ have opposite signs, and $y_n = 0$ otherwise. As a measure of noise-free ASR we take the correlation function between input and output signal *vs* B_0

$$C(B_0) = \frac{\langle D\xi(n)y_n\rangle - \langle D\xi(n)\rangle\langle y_n\rangle}{\sqrt{\langle D^2\xi^2(n)\rangle - \langle D\xi(n)\rangle^2}\sqrt{\langle y_n^2\rangle - \langle y_n\rangle^2}} = \frac{\langle\xi\,(n)\,y_n\rangle}{\sqrt{\langle y_n\rangle - \langle y_n\rangle^2}}, \tag{9}$$

where the angular brackets denote the time average. The curve $C(B_0)$ shown in Fig. 3(b) exhibits multiple strong maxima, so the noise-free ASM is found. It is also interesting to note that there is plenty of strong negative minima of C in Fig. 3(b), which means that the input and output signal are strongly anticorrelated. This is also a form of maximization of the signal transmission thorough our system via noise-free ASR. A closer inspection of Fig. 3(a) and Fig. 3(b) reveals that certain segments in the two curves can be related to each other. The relationship between the curves C *vs* B_0 and p *vs* B proves that the occurrence of multiresonance and complicated dependence of C on the control parameter is a result of the fractal structure of precritical attractors and their basins of attraction. Exhaustive discussion of the origin of SMR in maps with fractal precritical sets can be found in [12–14] for the case of periodic input signal.

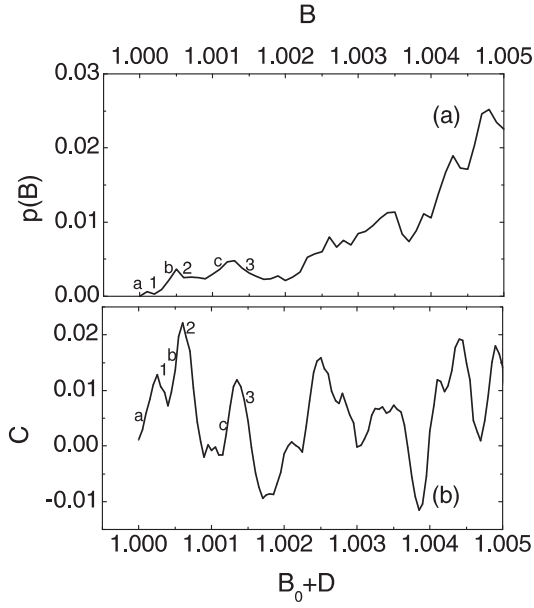

Fig. 3. Numerical results, spin jump (TC) probability $p \equiv \langle \tau \rangle^{-1}$ *vs* B (a) and C *vs* B_0 for aperiodic input signal with $\tau_0 = 1000$ and $D = 1 \times 10^{-4}$ (b). The rising (labeled with the same letters) and falling (labeled with the same numbers) segments of both curves correspond to each other.

4. Model of precritical attractor and basin of attraction

We assume the model of precritical attractor $\mathcal{A}$ as a family of $K+2$ parabolic segments $\mathcal{A}_k$ (Fig. 4) [25,29] with position determined by a time-dependent control parameter $q(n) = q_0 + D\xi(n)$,

$$\mathcal{A} = \bigcup_{k=0}^{K+1} \mathcal{A}_k = \bigcup_{k=0}^{K+1} \left\{ (x,y) : y = -x^2 - (1-\delta_{k,K+1})\, a\alpha^k + q_0 + D\xi(n) \right\}, \tag{10}$$

where a and α are model parameters and $q_0 = B_0 - B_c$. The invariant measure is uniformly distributed along the parabolic segments and its relative density on the segment $\mathcal{A}_k$ is assumed as $\tilde{\mu}_k = (1-\gamma)\,\gamma^k$ for $0 \le k \le K$, and $\tilde{\mu}_{K+1} = \gamma^{K+1}$, where $0 < \gamma < 1$ is another model parameter. The precritical basin of attraction is in turn approximated as a family of $L+2$ stripes $\mathcal{B}_l$ accumulating at the line $y = 0$ which touches the top of the uppermost parabola $\mathcal{A}_{K+1}$ for $q_0 = D = 0$ (Fig. 4) [29],

$$\mathcal{B} = \bigcup_{l=0}^{L+1} \mathcal{B}_l = \bigcup_{l=0}^{L+1} \left\{ (x,y) : (1-\delta_{l,L+1}) \left(\beta^l b - \beta^l b_{\mathrm{E}} \right) \le y \le \beta^l b \right\}, \tag{11}$$

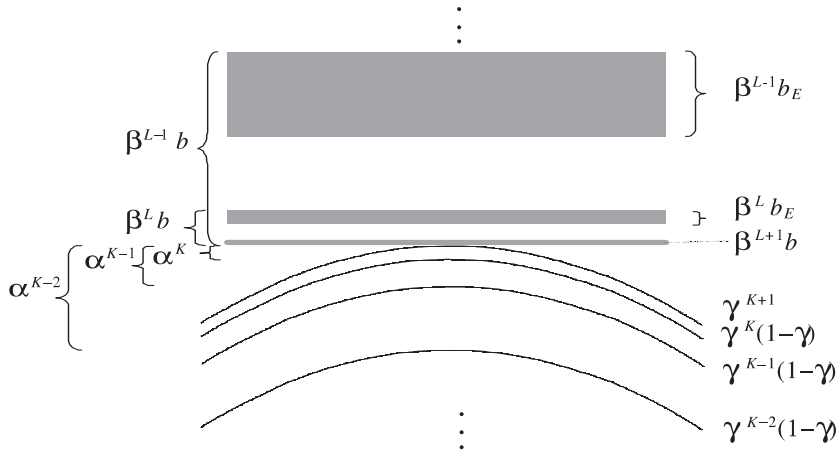

Fig. 4. The model of chaotic saddle for $a = 1$ and $q = 0$.

where β, b and b_{E} are again model parameters. Above the crisis point the precritical attractors and basins of attraction are turned into chaotic saddles and pseudobasins (basins of escape), respectively, but it is assumed that their topological structure given by Eq. (10), (11) remains unchanged. All model parameters can be assessed from magnified plots of the collision region between the chaotic saddles and pseudobasins and from the eigenvalues of the periodic orbit mediating in crisis [25, 29]. With increasing q_0 the parabolic noisy segments are shifted up and enter the pseudobasin. The time-dependent probability of a jump between the symmetric parts of the postcritical attractor $p(n) = \zeta\mu(n)$ is proportional to the time-dependent measure of the saddle contained inside the pseudobasin of the other saddle [12, 14]

$$p(q_0, \xi(n)) = \zeta \sum_{k=0}^{K+1} \sum_{l=0}^{L+1} \mu_{kl}(n)\,, \tag{12}$$

where ζ is a proportionality constant. Here p is the sum of inputs μ_{kl} to the time-dependent measure from the segments $\mathcal{A}_k$ overlapping the stripes $\mathcal{B}_l$. Denoting by $\mu_k(c, q_0, \xi)$ the measure (length multiplied by the relative measure density $\tilde{\mu}_k$) of the segment $\mathcal{A}_k$ inside the half-plane $y > c$ for a given q_0 and an instant value of $\xi = \xi(n)$ we can write

$$\mu_{kl} = \mu_{kl}(q_0, \xi) = \mu_k\left[(1 - \delta_{l,L+1})\left(\beta^l b - \beta^l b_{\mathrm{E}}\right), q_0, \xi\right] - \mu_k\left[\beta^l b, q_0, \xi\right]. \tag{13}$$

For small values of the distance between the top of the parabolic segment and the border of the half-plane, $q_0 + D\xi - (1 - \delta_{k,K+1})\, a\alpha^k - c \ll 1$, lengths

of segments of parabolas inside the half-planes can be approximated by corresponding square roots and the measure μ_k can be written as

$$\mu_k\left(c, q_0, \xi\right) \approx 2\widetilde{\mu}_k \left(q_0 + D\xi - \left(1 - \delta_{k,K+1}\right) a\alpha^k - c\right)^{\frac{1}{2}} \times \Theta\left(q_0 + D\xi - \left(1 - \delta_{k,K+1}\right) a\alpha^k - c\right) , \tag{14}$$

where Θ is the Heaviside function. Henceforth, we limit our attention to the adiabatic limit of long correlation time τ_0 [6]. Then the time averages in Eq. (9) can be replaced with averages over the probability distribution of the signal,

$$\langle y_n \rangle = \int_{-\infty}^{\infty} \rho(\xi) p(q_0, \xi) d\xi , \qquad \langle \xi\left(n\right) y_n \rangle = \int_{-\infty}^{\infty} \rho(\xi) p(q_0, \xi) \xi d\xi . \tag{15}$$

This yields

$$\langle \xi^m\left(n\right) y_n \rangle = \Gamma\left(\frac{3}{2} - m\right) \frac{D^{\frac{1}{2}}}{\sqrt{2\pi}} \sum_{k=0}^{K+1} \sum_{l=0}^{L+1} \widetilde{\mu}_k \left\{ \exp\left[-\frac{1}{4}\left(\frac{W_l - Q_{0k}}{D}\right)^2\right] \times \mathcal{D}_{-\frac{3}{2}+m}\left(\frac{W_l - Q_{0k}}{D}\right) - \exp\left[-\frac{1}{4}\left(\frac{V_l - Q_{0k}}{D}\right)^2\right] \mathcal{D}_{-\frac{3}{2}+m}\left(\frac{V_l - Q_{0k}}{D}\right) \right\} , \tag{16}$$

where $m = 0$ or $m = 1$, $W_l = (1 - \delta_{l,L+1})(\beta^l b - \beta^l b_{\mathrm{E}})$, $V_l = \beta^l b$, $Q_{0k} = q_0 - (1 - \delta_{k,K+1})\, a\alpha^k$, Γ is the Euler gamma function and $\mathcal{D}_\alpha$ is the parabolic cylinder function of order α. Using Eq. (16) we can evaluate the correlation function C (9).

5. Comparison between the numerical and theoretical results

As can be seen in Fig. 5(b)–(d) noise-free ASM occurs in our system for a wide range of the input signal amplitude D. The observed phenomenon bears much resemblance to noise-free stochastic multiresonance with periodic signal [12–14], but the multiple maxima of the correlation function are less distinct due to the long tails in the probability distribution of the aperiodic signal. In all cases the agreement between the theoretical and numerical results is good. Particularly good agreement is obtained for the first maximum of C for $D = 1 \times 10^{-4}$, whose position and height is predicted by our theory very well (Fig. 5(b)). In Fig. 5(c) and Fig. 5(d) at least the position and the order of magnitude of the height of local maxima are well predicted. The theory predicts also quite well the location and order of magnitude of

the negative minima of C. As B_0 is increased deviations between the numerical and theoretical curves in Fig. 5(b)–(d) become significant. This is because the model given by Eqs. (10),(11) is valid only close to the crisis point, and for small noise amplitude D.

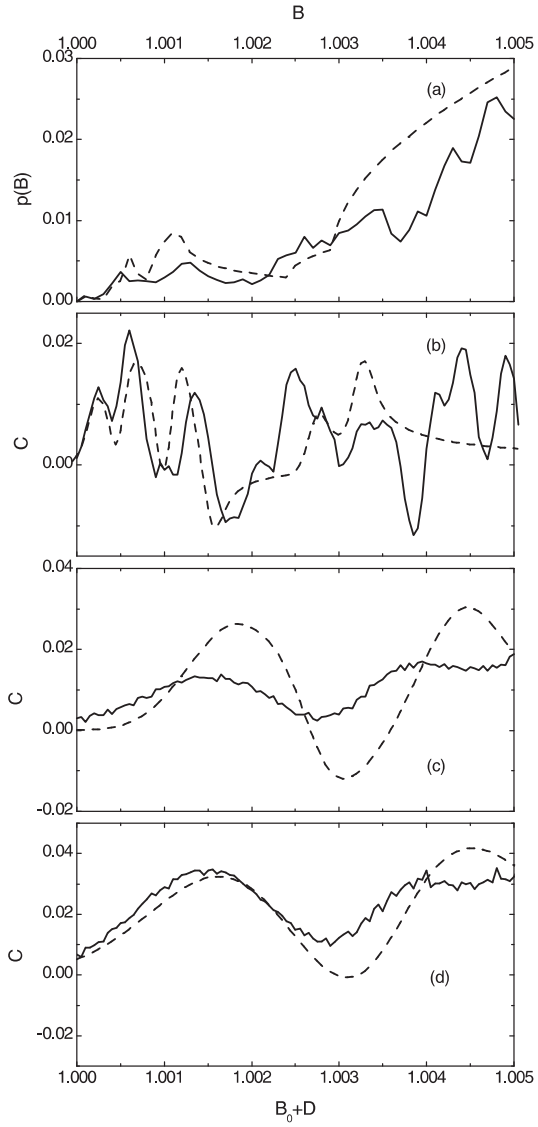

Fig. 5. Noise-free ASM. The numerical (solid line) and theoretical (dashed line) curves for the aperiodic signal with correlation time $\tau_0 = 1000$ and intensity (b) $D = 1 \times 10^{-4}$, (c) $D = 3 \times 10^{-4}$, (d) $D = 6 \times 10^{-4}$.

6. Summary and conclusions

The occurrence of noise-free stochastic multiresonance in TC systems is a natural consequence of the non-monotonic dependence of the TC probability $p = 1/\langle\tau\rangle$ on the control parameter [14]. This conclusion can be also easily extended to the case of aperiodic signals. In this paper we used the kicked spin map as a model for such a class of systems in which noise-free ASM appears. In particular, we considered the neighborhood of attractor merging crisis where the oscillations of TC probability are the result of the fractal structure of chaotic saddles and pseudobasins. This fractal structure is well reflected in the dependence of C on the control parameter. It was shown both numerically and theoretically that the noise-free ASM appears as an effect of a penetration of the fractal pseudobasin by the fractal saddle above the crisis point. The theory based on topological models of these sets close to crisis, combined with the adiabatic theory of SR, yields qualitative agreement with numerical results. The best fit has been obtained for small amplitudes of aperiodic signal and just above the threshold for crisis.

In comparison with the case of noise-free stochastic multiresonance with periodic signals with comparable amplitudes [13], the C *vs* B_0 curves show less complicated structure and the maxima are in general broader and more smooth. This difference results from a distinct character of the periodic and aperiodic input signals. The periodic signal is deterministic and constrained to a finite interval. The aperiodic one shows small fluctuations at a time scale much smaller than the correlation time τ_0 and its values are not constrained. The small signal fluctuations smooth out the fine fractal structure, and thus also the related maxima of C, at a scale of the control parameter B_0 much smaller than D. On the other hand, for large values of the signal, $\xi_n \gg D$, many branches and stripes of the chaotic saddle and pseudobasin overlap at a given moment, independently of the value of B_0, which results in broadening of the maxima of C.

The oscillations of the TC (escape) probability were observed in many systems with crises [24,30]. Thus we can suppose that the noise-free ASM occurs also in other chaotic systems close to crises, including experimental ones with continuous time.

This work was supported by the Polish State Committee for Scientific Research (KBN) under grant No. 5 P03B 007 21. S.M. acknowledges the support by the DAAD scholarship for the stay at the Institute of Physics, Humboldt University at Berlin.

REFERENCES

[1] R. Benzi, A. Sutera, A. Vulpiani, *J. Phys.* **A14**, L453 (1981).

[2] L. Gammaitoni, P. Hänggi, P. Jung, P. Marchesoni, *Rev. Mod. Phys.* **70**, 223 (1998).

[3] V.S. Anishchenko, S. Neiman, F. Moss, L. Schimansky-Geier, *Usp. Fiz. Nauk* **169**, 7 (1999).

[4] V.S. Anishchenko, A.B. Neiman, M.A. Safanova, *J. Stat. Phys.* **70**, 183 (1993).

[5] J.J. Collins, C.C. Chow, T.T. Imhoff, *Phys. Rev.* **E52**, R3321 (1995).

[6] J.J. Collins, C.C. Chow, A.C. Capella, T.T. Imhoff, *Phys. Rev.* **E54**, 5575 (1996).

[7] J.J. Collins, C.C. Chow, T.T. Imhoff, *Nature* **376**, 236 (1995).

[8] D.R. Chialvo, A. Longtin, J. Mueller-Garking, *Phys. Rev.* **E55**, 1798 (1997).

[9] A. Krawiecki, A. Sukiennicki, *Chaos* **8**, 768 (1998).

[10] J.M.G. Vilar, J.M. Rubí, *Phys. Rev. Lett.* **78**, 2882 (1997).

[11] J.M.G. Vilar, J.M. Rubí, *Physica A* **264**, 1 (1999).

[12] S. Matyjaśkiewicz, A. Krawiecki, J.A. Hołyst, K. Kacperski, W. Ebeling, *Phys. Rev.* **E63**, 026215 (2001).

[13] A. Krawiecki, S. Matyjaśkiewicz, J.A. Hołyst, *Acta Phys. Pol. B* **30**, 1501 (2001).

[14] A. Krawiecki, S. Matyjaśkiewicz, K. Kacperski, J.A. Hołyst, *Phys. Rev.* **E64**, 041104 (2001).

[15] B. NcNamara, K. Wiesenfeld, R. Roy, *Phys. Rev. Lett.* **60**, 2626 (1988).

[16] B. McNamara, K. Wiesenfeld, *Phys. Rev.* **A39**, 4854 (1989).

[17] G. Nicolis, C. Nicolis, D. McKernan, *J. Stat. Phys.* **70**, 125 (1993).

[18] S. Sinha, B.K. Chakrabarti, *Phys. Rev.* **E58**, 8009 (1998).

[19] S. Sinha, *Physica A* **270**, 204 (1999).

[20] K. Wiesenfeld, D. Pierson, E. Pantazelou, Ch. Dames, F. Moss, *Phys. Rev. Lett.* **72**, 2125 (1994).

[21] H.E. Plesser, T. Geisel, *Phys. Rev.* **E59**, 7008 (1999).

[22] Z. Gingl, L.B. Kiss, F. Moss, *Europhys. Lett.* **29**, 191 (1995).

[23] J.A. Hołyst, A. Sukiennicki, *Acta Phys. Pol. A* **81**, 353 (1992).

[24] C. Grebogi, E. Ott, F. Romeiras, J.A. Yorke, *Phys. Rev.* **A36**, 5365 (1987).

[25] K. Kacperski, J. A. Hołyst, *Phys. Rev.* **E60**, 403 (1999).

[26] S. Matyjaśkiewicz, J.A. Hołyst, A. Krawiecki, *Phys. Rev.* **E61**, 5134 (2000).

[27] E.M. Chudnovsky, J. Tejada, *Macroscopic Quantum Tunneling of the Magnetic Moment*, Cambridge University Press, Cambridge, UK 1998.

[28] J.R. Friedman, M.P. Sarachik, J. Tejada, R. Ziolo, *Phys. Rev. Lett.* **76**, 3830 (1996).

[29] K. Kacperski, J.A. Hołyst, *Phys. Lett.* **A254**, 53 (1999).

[30] J.C. Sommerer, C. Grebogi, *Int. J. Bifurcation & Chaos Appl. Sci. Eng.* **2**, 383 (1992).