DECAY SPECTROSCOPY OF NEUTRON-RICH NUCLEI IN THE VICINITY OF ^{110}Zr AT RIBF*

Toshiyuki Sumikama

Department of Physics, Faculty of Science, Tohoku University
Sendai 980-0845, Japan

(Received February 27, 2013)

The decay spectroscopy of ^{106,108}Zr has been performed as a first decay spectroscopy experiment at the RIKEN Radioactive Isotope Beam Factory (RIBF). The γ rays emitted from ^{106}Zr and ^{108}Zr were measured in the β decay of ^{106}Y and in the decay of the ^{108}Zr isomer, respectively. The deformation evolution of the Zr isotopes and the isomerism of ^{108}Zr are discussed. The EUROBALL-RIKEN Cluster Array (EURICA) spectrometer used for the decay spectroscopy with high statistics at RIBF is introduced.

DOI:10.5506/APhysPolB.44.319
PACS numbers: 23.20.Lv, 23.35.+g, 27.60.+j

1. Introduction

Shape evolution in the neutron-rich Zr isotopes attracts much attention because at proton number $Z = 40$ the shell structures for a wide variety of shapes, *i.e.* spherical, prolate, oblate, and more exotic tetrahedral shapes, are closed [1, 2]. Shape transitions and maximum deformation at this deformed sub-shell closure are expected for Zr isotopes.

The ^{110}Zr ($Z = 40$ and $N = 70$) is predicted to be a spherical shape nucleus due to a possible sub-shell closure at $N = 70$ if the interaction with a tensor force and a reduced spin-orbit term is used [3]. The ^{110}Zr is also a doubly magic nucleus for the exotic tetrahedral shape [2]. Therefore, nuclei in the vicinity of ^{110}Zr are candidates to search for the shape transition. A tetrahedral shape has a different symmetry from the general quadrupole shape, thus, it may be difficult to populate a tetrahedral state. The in-flight-fission reaction of ^{238}U beam is a promising method to produce the tetrahedral shape since it may become an isomeric state. We performed

* Presented at the Zakopane Conference on Nuclear Physics "Extremes of the Nuclear Landscape", Zakopane, Poland, August 27–September 2, 2012.

a decay spectroscopy experiment for nuclei around ^{110}Zr as the first decay experiment at RIBF. In the experiment, γ rays from ^{106,108}Zr were measured for the first time [4].

2. Experiment

Secondary radioactive isotope (RI) beam in the vicinity of ^{106}Zr and ^{108}Zr was produced using in-flight-fission reaction of a ^{238}U beam having an energy of 345 MeV/nucleon. Fission fragments were separated and identified using the RI-beam separator BigRIPS. The fragments were identified event-by-event by the $B\rho$-ΔE-TOF method using the beam line detectors. The fragment identification plot is shown in Fig. 1. The fragments were transported to the decay spectroscopy setup and implanted into stacked double-sided-silicon-strip detectors (DSSD). The setup is schematically shown in Fig. 2. The size of the DSSD is $50 \times 50 \times 1\,\mathrm{mm}^3$ with 16×16 strips. The γ rays from the implanted neutron-rich nuclei were measured by four Compton-suppressed clover-type Ge detectors. Isomeric states were produced in the in-flight-fission reaction and transported into the DSSDs. The γ rays from isomeric states with half-lives of $\sim \mu$s were measured in coincidence with the implantation of the fragments. At the same time, γ rays from the β-delayed γ rays were also measured. The position correlation in the DSSD between the implantation and β-decay events was used to determine the parent nucleus of the β decay daughter.

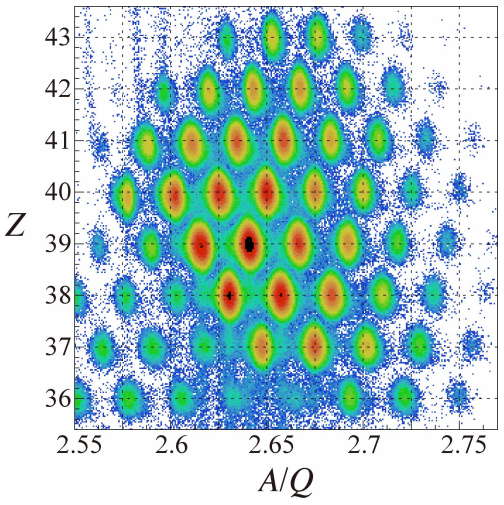

Fig. 1. Fragment identification plot. The horizontal axis is the mass to charge ratio. The vertical axis is the atomic number.

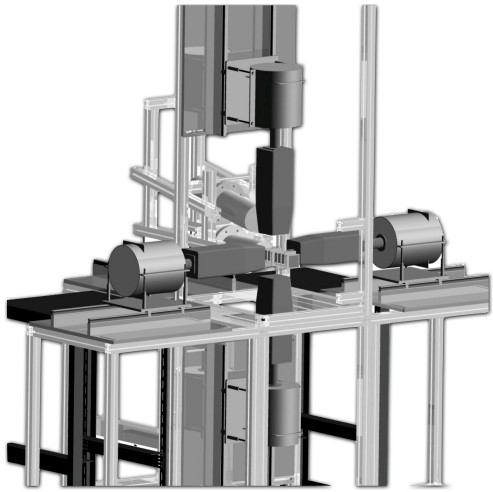

Fig. 2. Schematic view of experimental setup for the β- and isomer-decay spectroscopy. Nine double-sided-silicon-strip detectors and four clover-type Ge detectors were used.

3. Results on ^{106,108}Zr

The β-decay events of ^{106}Y were selected by associating the positions between the β-decay and the implantation within a 200 ms time window. The same strip for each side of the DSSD was required to reduce the background. Figure 3 (a) shows the β-delayed γ-ray spectrum of ^{106}Y. Because the β-delayed neutron may be emitted, the spectrum includes the γ rays not only from ^{106}Zr but also from ^{104,105}Zr. The β-delayed-γ-ray spectra of ^{104,105}Y were compared with the spectrum of ^{106}Y. The γ rays at 140 and 169 keV were measured also for the β decay of ^{104,105}Y and ^{105}Y, respectively. Other three peaks were assigned to the γ rays of ^{106}Zr. The most intense γ ray at 152 keV was assigned as the transition from the first 2^+ state to the ground state in ^{106}Zr, because, in case of the β decay to an even–even nucleus, most decay branches proceed to the ground state of the daughter nucleus via the first 2^+ state. The 324 keV line was assigned to be the first 4^+ state based on the systematic trend along the neutron number $N = 66$.

An isomeric state with a half-life of 620 ± 150 ns has been discovered in ^{108}Zr. Five γ rays at energies of 174, 279, 348, 478, and 606 keV were measured as shown in Fig. 3 (b). The γ rays at 174 and 348 keV are tentatively assigned as the transitions from the first 2^+ state to the ground state and from the first 4^+ state to the 2^+ state from the systematic trend of even–even Zr isotopes.

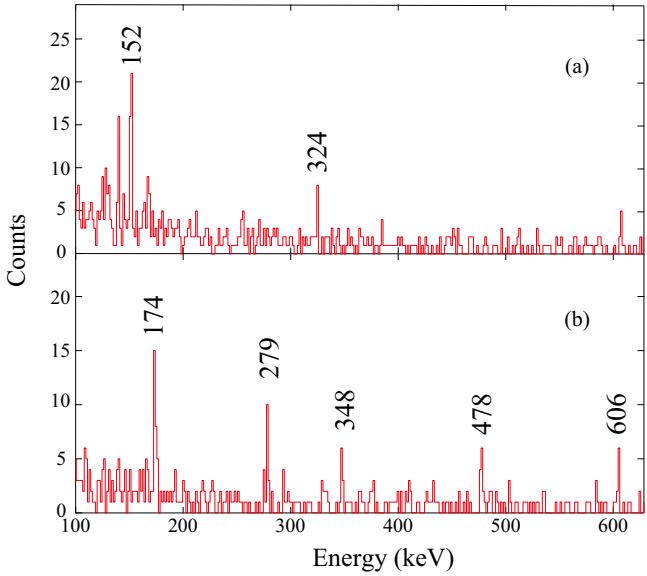

Fig. 3. Gamma-ray spectra of (a) the β decay of ^{106}Y and (b) the isomeric decay of ^{108}Zr.

4. Discussion

4.1. Deformation evolution

The ratios of energies of the first 4^+ and 2^+ states for even–even Zr isotopes can be calculated as 2.57, 3.15 3.25, 3.13, and 3.00 for $A = 100$, 102, 104, 106, and 108, respectively. This fact indicates that the shapes of Zr isotopes are well deformed up to $A = 108$. Because of the highest value of this ratio, the maximum deformation for the Zr isotopes can be expected at ^{104}Zr for $N = 64$.

The structure of nuclei around the neutron-rich Zr isotopes can be discussed by looking at the systematics of the inverse of the first 2^+ state energy: $1/E(2_1^+)$ [5]. In Fig. 4 (a), the lines with $N = 62$ and 66 overlap at $Z = 40$ and 42. This indicates that the deformation of the $N = 66$ isotones is almost the same as that of the $N = 62$ isotones for Zr and Mo isotopes. From the systematics of the $N = 68$ isotones for $Z \geq 42$ [6], the deformation of the $N = 68$ Zr isotope is predicted to be significantly smaller than that of the $N = 62$ and 64 Zr isotopes. However, the result for ^{108}Zr shows that the deformation of the $N = 68$ isotones increases at $Z = 40$. There is no evidence of a significant change in the deformation at $N = 68$ for Zr isotopes.

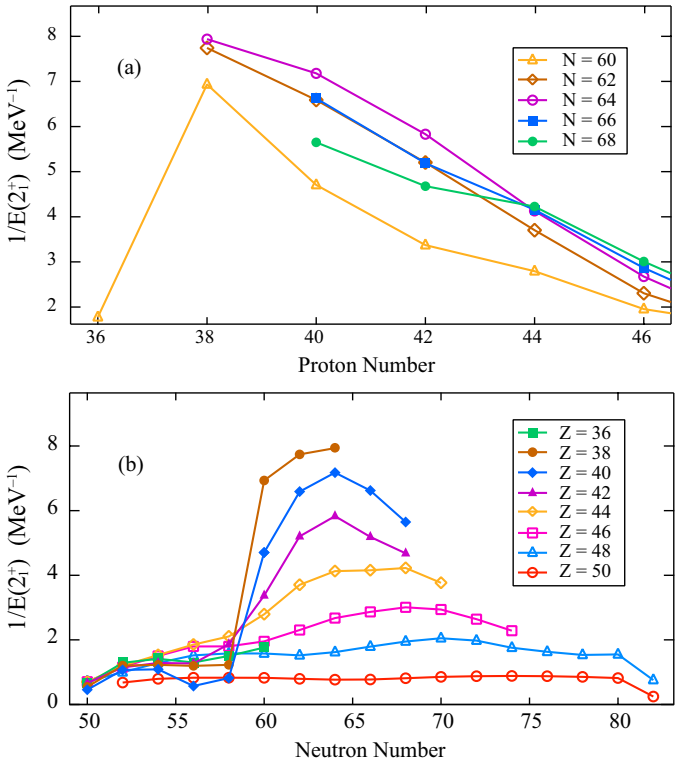

Fig. 4. Inverse of first 2^+ state energy as a function of proton and neutron numbers for nuclei in the vicinity of neutron-rich Zr isotopes [7].

Figure 4 (b) shows $1/E(2_1^+)$ as a function of the neutron number. Values of $1/E(2_1^+)$ suddenly increase at $N = 60$ for Kr, Sr, Zr and Mo isotopes, and lines for these isotopes cross each other. This trend indicates the onset of deformation mediated by the disappearance of the $Z = 40$ sub-shell gap [5]. The $1/E(2_1^+)$ values reach a maximum at $N = 64$ for both Zr and Mo isotopes. The maximum value of $1/E(2_1^+)$ at $N = 64$ can be interpreted as the deformed shell closure at $N = 64$ at $\beta_2 \approx 0.47(7)$ [8] of ^{104}Zr. As can be inferred from Fig. 4, the maximum deformation for even–even nuclei in this region may occur at ^{102}Sr with the proton and neutron numbers $Z = 38$ and $N = 64$. This expectation will be verified by future experiments on very neutron-rich Sr and Kr isotopes of neutron numbers up to $N = 66$.

4.2. Isomeric state in ^{108}Zr

The ^{108}Zr isomer is the only isomer discovered in even–even nuclei in the present work. The known isomeric states in the even–even nuclei in this deformed region have half-lives of less than 100 ns. These isomeric states

decay to the ground state during the fragment transport from the reaction target to the decay-spectroscopy apparatus. The ^{108}Zr isomer may have a special isomerism.

One possibility is that the isomeric state of ^{108}Zr has a tetrahedral shape. The tetrahedral shape has ideally no quadrupole component, therefore, an excited tetrahedral state becomes a shape isomer [9]. If there is any mixing of the tetrahedral and other shapes, the half life is reduced. The total energy calculation of the tetrahedral- or quadrupole-deformed shape shows that the energy barrier between tetrahedral and oblate shapes varies for different isotopes [2]. While the barrier is expected to be very small for ^{104,106}Zr, it increases for ^{108}Zr. The onset of ^{108}Zr isomerism may be related to the growth of the energy barrier.

Another possibility for the isomerism is a two-quasineutron state with a high K value. The configuration, the K value, and the energy are predicted in [10]. A recent paper reported the γ ray spectrum from the ^{108}Zr isomer from a different data set [11]. Additional information was obtained about new γ rays, their intensities, and coincidence relationships, and a new decay scheme was proposed. The spins of the ground state band were tentatively assigned, those on other decay paths were not assigned. The $K = 6^+$ assignment was proposed for the isomer based on the energy of the isomeric state and its connection to the 8^+ state.

Although the statistics of the new data set [11] was higher than that of the first experiment [4], there are some γ lines with low numbers of counts. We may find additional γ rays, if higher statistics data are obtained. For example, γ rays from $K = 6^+$ to 4_1^+ states will be emitted if the isomeric state is a $K = 6^+$ isomer. A large statistics data set is required to confirm the isomeric assignment. Theoretical predictions of not only the energies and configurations of states but including also the decay scheme and the half-life are required. The g factor measurement is also critical to study the isomerism.

5. EURICA project at RIBF

To proceed with the decay spectroscopy research program the EUROBALL-RIKEN Cluster Array (EURICA) project was started at RIBF in 2012. The fragment separator BigRIPS provides a cocktail beam which includes many nuclides at the same time as shown in Fig. 1. Because of this characteristic many nuclei can be studied at the same time. However, because the total rate of fragments should be less than typically 100 pps in this setup, the total number of implanted nuclei is not large enough for experiments requiring high statistics. A high-efficiency gamma-ray detector is necessary in order to get high statistics data. The EUROBALL germa-

nium cluster detectors have a high efficiency of about 20% at 200 keV. The combination of EURICA, an active silicon stopper and the new generation RI beam facility, RIBF, is a most powerful tool for the β–γ spectroscopy far from the stability line. A lot of experiments in the neutron- and proton-rich regions of exotic nuclei were proposed. The neutron-rich nuclei from $Z = 20$ to 65 are covered by the proposed experiments. It was also proposed to revisit the subject of the decay spectroscopy of neutron-rich Zr isotopes. The isomeric and β decay studies will be performed around the ^{108}Zr. Not only a high statistics data set of the isomeric decay but also the β-delayed γ-ray data from ^{108}Zr will be obtained. The common γ rays will be observed from these two decays. The β-delayed γ rays can be used for the confirmation of the level scheme and will provide additional restrictions on the spin assignments.

REFERENCES

[1] J. Skalski *et al.*, *Nucl. Phys.* **A617**, 282 (1997).
[2] N. Schunck *et al.*, *Phys. Rev.* **C69**, 061305 (2004).
[3] M. Bender *et al.*, *Phys. Rev.* **C80**, 064302 (2009).
[4] T. Sumikama *et al.*, *Phys. Rev. Lett.* **106**, 202501 (2011).
[5] R.B. Cakirli, R.F. Casten, *Phys. Rev.* **C78**, 041301 (2008).
[6] W. Urban *et al.*, *Eur. Phys. J.* **A20**, 381 (2004).
[7] Evaluated Nuclear Structure Data File (ENSDF) database, `www.nndc.bnl.gov/ensdf`
[8] J.K. Hwang *et al.*, *Phys. Rev.* **C73**, 044316 (2006).
[9] M. Jentschel *et al.*, *Phys. Rev. Lett.* **104**, 222502 (2010) and references therein.
[10] Y. Shi *et al.*, *Phys. Rev.* **C85**, 027307 (2012).
[11] D. Kameda *et al.*, *Phys. Rev.* **C86**, 054319 (2012).